The information in this drawing is the sole property of Sakshi Innovations. Any reproduction in part or as a whole without the written permission of Sakshi Innovations is prohibited.

All dimensions are in mm.

TECHNICAL DRAWING SHEET

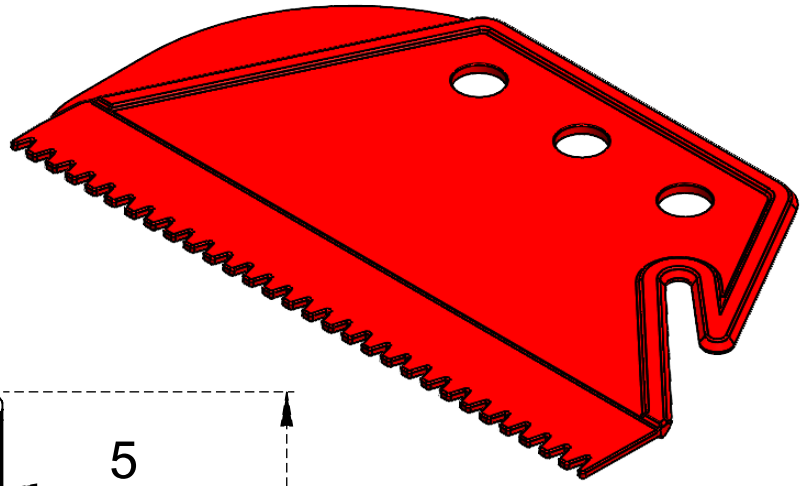

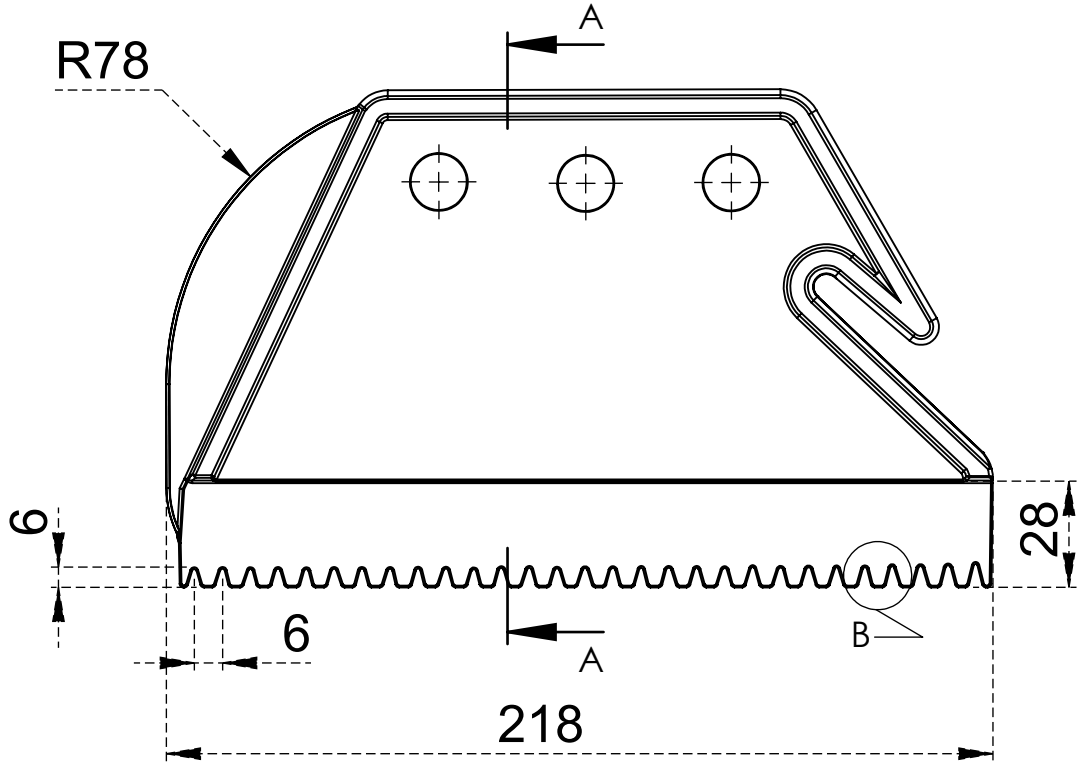

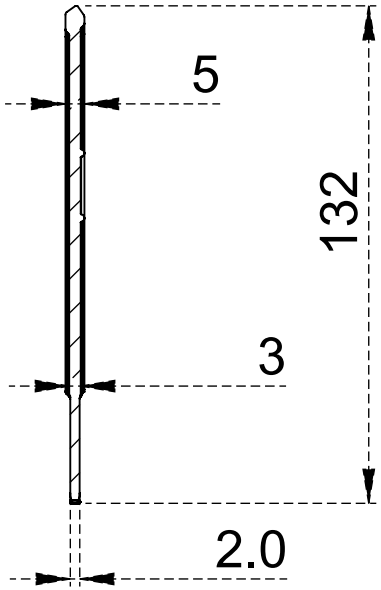

SECTION A-A

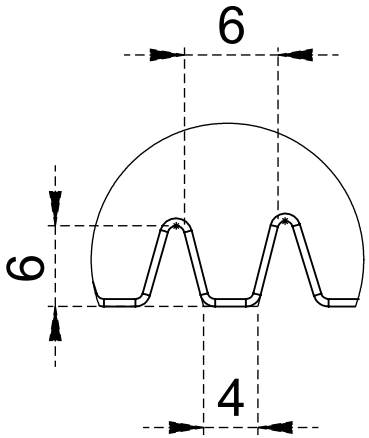

DETAIL B

The information in this drawing is the sole property of Sakshi Innovations. Any reproduction in part or as a whole without the written permission of Sakshi Innovations is prohibited.